CLASSICMARBLE

STANDARD RANGE, SQUARE / RECTANGLE

Standard Tray Base Design. Ø56mm outlet, 85mm high

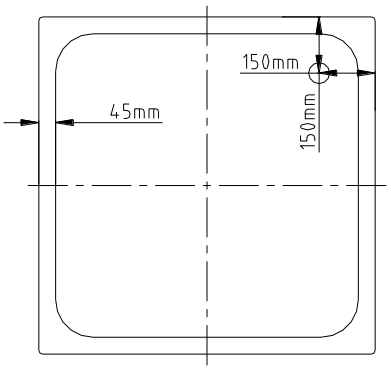

700 X 700 760 X 760 800 X 800
900 X 900 918 X 918 1000 X 1000

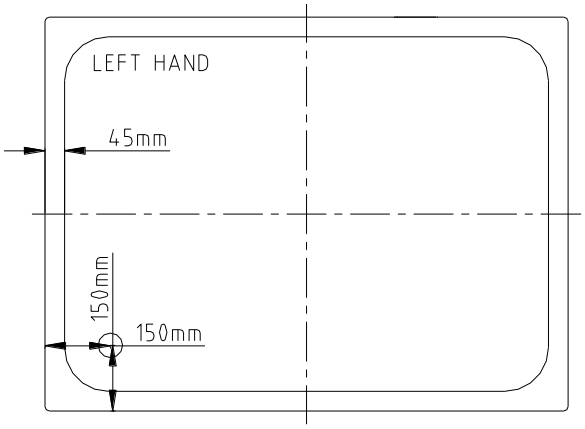

900 X 700 900 X 760 900 X 800
1000 X 700 1000 X 760 1000 X 800

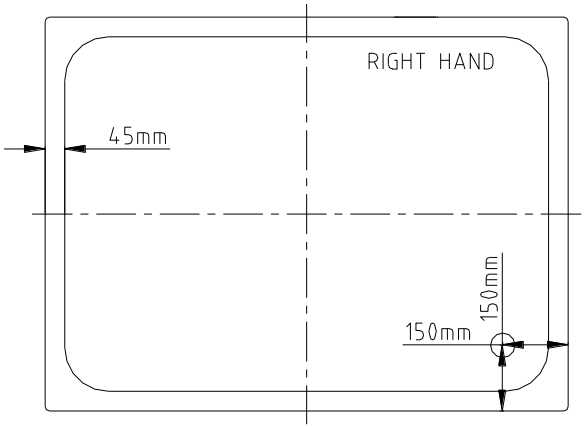

1000 X 900

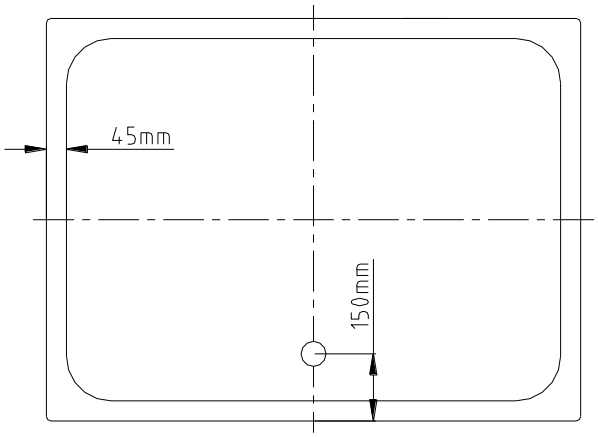

1100 X 700 1100 X 760 1100 X 800
1100 X 900 1200 X 700 1200 X 760
1200 X 800 1400 X 800 1400 X 900
1500 X 800 1500 X 900 1600 X 800

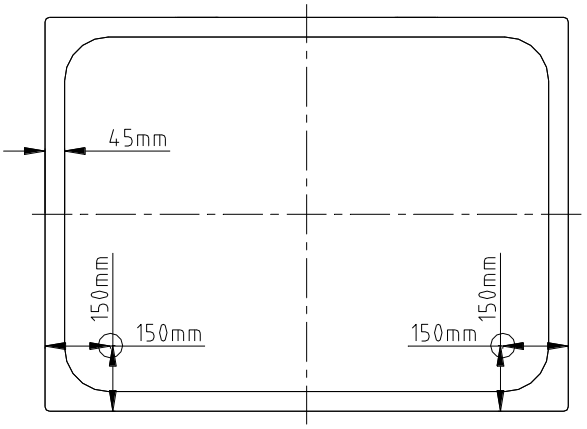

1200 X 800
1200 X 900
1500 X 900

185 Omagh Road, Garvaghey, Dungannon, Co.Tyrone, N.Ireland BT70 2AL **Tel:** +44(0)28 85568081 **Fax:** +44 (0)28 85568082 **email:** info@classic-marble.com www.classic-marble.com
An ISO 9001:2008 Registered Company. Company Registration No. NI 27517