CLASSIC MARBLE

CLASSI CHIC RANGE

SQUARE / RECTANGLE / QUADRANT / OFFSET QUADRANT

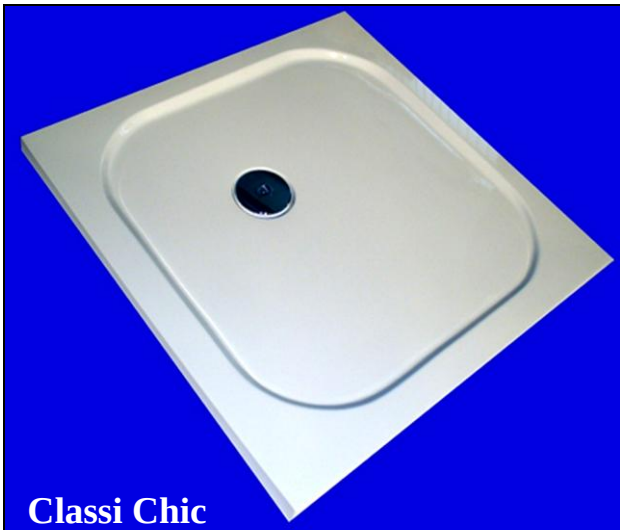

Classi Chic
Ø90mm recessed outlet, 50mm high

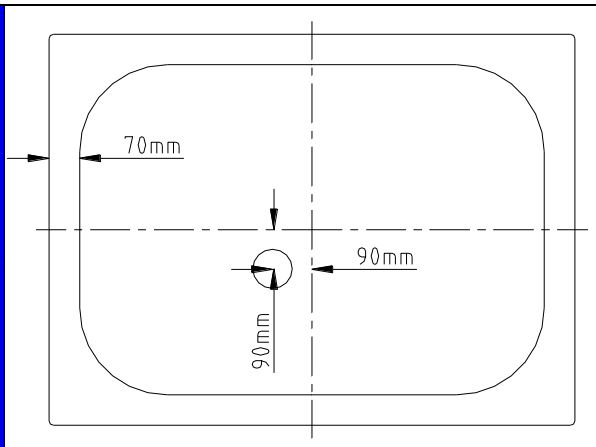

1000 X 760	1000 X 800	1000 X 900
1100 X 900	1200 X 760	1200 X 800
1200 X 900	1200 X 1000	1400 X 900
1500 X 900	1700 X 750	

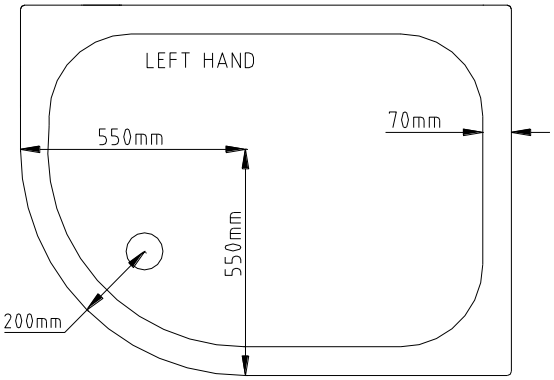

900 X 800 1200 X 800 1200 X 900
1000 X 800

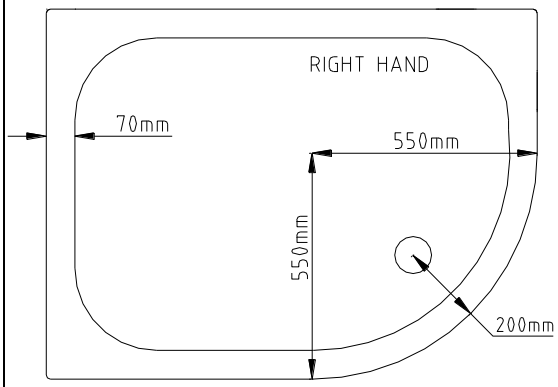

900 X 800 1200 X 800 1200 X 900
1000 X 800

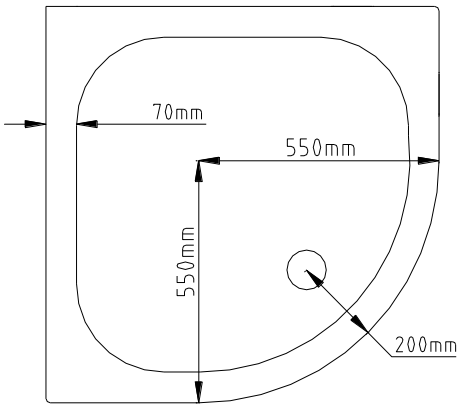

800 Quad 900 Quad 1000 Quad

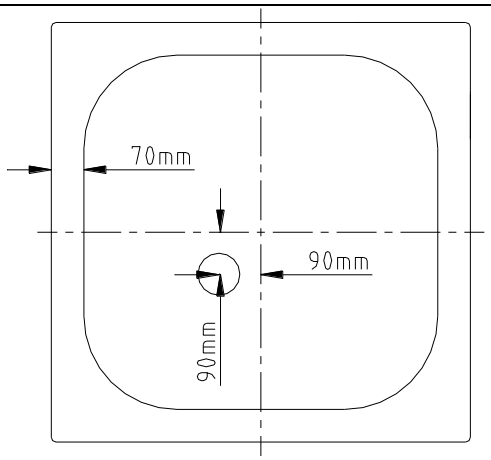

800 X 800 900 X 900
NEW 1000 X 1000!

185 Omagh Road, Garvaghey, Dungannon, Co.Tyrone, N.Ireland BT70 2AL **Tel:** +44(0)28 85568081 **Fax:** +44 (0)28 85568082 **email:** info@classic-marble.com www.classic-marble.com
An ISO 9001:2008 Registered Company. Company Registration No. NI 27517